HEATER, AIR CONDITIONER AND VENTILATION

CONTENTS

GENERAL INFORMATION 3
Safety Precautions 3

SERVICE SPECIFICATIONS 4

LUBRICANTS 4

SPECIAL TOOLS 4

TROUBLESHOOTING 5

ON-VEHICLE SERVICE 8
Refrigerant Level Test Through Performance Test 8
Magnetic Clutch Test 9
Receiver Drier Test 9
Compressor Drive Belt Adjustment 9
Dual Pressure Switch Check 9

CONTINUED ON NEXT PAGE

WARNINGS REGARDING SERVICING OF SUPPLEMENTAL RESTRAINT SYSTEM (SRS) EQUIPPED VEHICLES

WARNING!

(1) Improper service or maintenance of any component of the SRS, or any SRS-related component, can lead to personal injury or death to service personnel (from inadvertent firing of the air bag) or to the driver and passenger (from rendering the SRS inoperative).
(2) Service or maintenance of any SRS component or SRS-related component must be performed only at an authorized MITSUBISHI dealer.
(3) MITSUBISHI dealer personnel must thoroughly review this manual, and especially its GROUP 52B – Supplemental Restraint System (SRS) before beginning any service or maintenance of any component of the SRS or any SRS-related component.

NOTE
The SRS includes the following components: SRS-ECU, SRS warning lamp, air bag module, clock spring, side impact sensors and interconnecting wiring. Other SRS-related components (that may have to be removed/installed in connection with SRS service or maintenance) are indicated in the table of contents by an asterisk (*).

Charging 10
Performance Test 14
Refrigerant Leak Repair 16
Compressor Noise 16
Power Relay Check 17
Idle-up Operation Check 18

HEATER CONTROL ASSEMBLY AND A/C SWITCH 19

HEATER UNIT*, BLOWER UNIT*, RESISTER* AND EVAPORATOR* 22

BLOWER MOTOR ASSEMBLY AND INSIDE/OUTSIDE AIR CHANGEOVER DAMPER MOTOR 25

COMPRESSOR AND TENSION PULLEY 26

CONDENSER AND CONDENSER FAN MOTOR 30

REFRIGERANT LINE 32

VENTILATORS* 34

GENERAL INFORMATION

The heater system uses a two-way-flow full-air-mix system that features high performance and low operating noise, and includes an independent face air blowing function. The A/C system is basically the same as the conventional system, but a new refrigerant system has been adopted as a response to restrictions on the use of chlorofluorocarbons. In addition, an air purifier which carries out fine A/C control has been included.

Items		Specifications
Heater unit	Type	Two-way-flow full-air-mix system
Heater control assembly		Dial type
Compressor	Model	Scroll type <KC 50AG>
Dual pressure switch kPa	High-pressure switch	ON → OFF: 2,650, OFF → ON: 2,050
	Low-pressure switch	ON → OFF: 176, OFF → ON: 186
Refrigerant and quantity g		R-134a (HFC-134a) Approx. 550 – 590 (R.H.D.) Approx. 600 – 640 (L.H.D.)

SAFETY PRECAUTIONS

Because R-134a refrigerant is a hydrofluorocarbon (HFC) which contains hydrogen atoms in place of chlorine atoms, it will not cause damage to the ozone layer.
Refrigerant R-134a is transparent and colourless in both the liquid and vapour state. Since it has a boiling point of –29.8°C, at atmospheric pressure, it will be a vapour at all normal temperatures and pressures. The vapour is heavier than air, non-flammable, and nonexplosive. The following precautions must be observed when handling R-134a.

Caution
Wear safety goggles when servicing the refrigeration system.

R-134a evaporates so rapidly at normal atmospheric pressures and temperatures that it tends to freeze anything it contacts. For this reason, extreme care must be taken to prevent any liquid refrigerant from contacting the skin and especially the eyes. Always wear safety goggles when servicing the refrigeration part of the A/C system. Keep a bottle of sterile mineral oil handy when working on the refrigeration system. Should any liquid refrigerant get into the eyes, use a few drops of mineral oil to wash them out. R-134a is rapidly absorbed by the oil. Next splash the eyes with plenty of cold water. Call your doctor immediately even though irritation has ceased after treatment.

Caution
Do not heat R-134a above 40°C

In most instances, moderate heat is required to bring the pressure of the refrigerant in its container above the pressure of the system when charging or adding refrigerant.
A bucket or large pan of hot water not over 40°C is all the heat required for this purpose. Do not heat the refrigerant container with a blow torch or any other means that would raise temperature and pressure above this temperature. Do not weld or steam clean on or near the system components or refrigerant lines.

Caution
Keep R-134a containers upright when charging the system.

When metering R-134a into the refrigeration system keep the supply tank or cans in an upright position. If the refrigerant container is on its side or upside down, liquid refrigerant will enter the system and damage the compressor.

Caution
1. **The leak detector for R-134a should be used to check for refrigerant gas leaks.**
2. **Do not allow liquid refrigerant to touch bright metal.**

Refrigerant will tarnish bright metal and chrome surfaces, and in combination with moisture can severely corrode all metal surfaces.

SERVICE SPECIFICATIONS

Items		Standard value
Idle speed r/min	4G1	750 ± 100
	4G9-MPI	700 ± 100
	4G9-GDI	600 ± 50
Idle up speed r/min	4G1	850 ± 100
	4G9-MPI	850 ± 100
	4G9-GDI	A/C at low load 700 ± 50 A/C at high load 800 ± 50
Resistor (for blower motor) Ω		LO: 2.3, ML:1.0, MH: 0.3
Air gap (Magnetic clutch)		0.25 – 0.55

LUBRICANTS

Items	Specified lubricants	Quantity
Each connection of refrigerant line	DENSO OIL 8	As required
Compressor refrigerant unit lubricant mℓ	DENSO OIL 8	60 – 100

SPECIAL TOOLS

Tool	Number	Name	Use
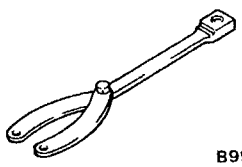 B991367	MB991367	Special spanner	Removal and installation of armature mounting nut of compressor
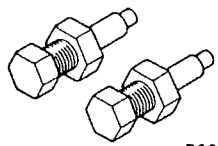 B991386	MB991386	Pin	

TROUBLESHOOTING

TROUBLESHOOTING PROCEDURES

Trouble symptom	Problem cause	Remedy	Reference page
When the ignition switch is "ON", the A/C does not operate	Fuse is defective	Replace the fuse	–
	Harness or connector is defective	Repair the harness or connector	–
	A/C compressor relay is defective	Replace the A/C compressor relay	55-17
	A/C compressor magnetic clutch is defective	Replace the armature plate, rotor or clutch coil	55-28
	Refrigerant leak or overfilling of refrigerant	Replenish the refrigerant, repair the leak or take out some of the refrigerant	55-16
	Dual pressure switch is defective	Replace the dual pressure switch	55-32
	A/C switch is defective	Replace the blower switch assembly	55-21
	Blower switch is defective	Replace the blower switch assembly	55-21
	Air thermosensor is defective	Replace the air thermosensor	55-22
	Engine-ECU is defective	Replace the engine-ECU	–
When the A/C is operating, temperature inside the passenger compartment doesn't decrease (cool air is not emitted)	Refrigerant leak	Replenish the refrigerant and repair the leak	55-16
	Dual pressure switch is defective	Replace the dual pressure switch	55-32
	Fan controller is defective	Replace the fan controller	GROUP14 – Radiator
	Air thermosensor is defective	Replace the air thermosensor	55-22
	Engine-ECU is defective	Replace the engine-ECU	–
Blower fan and motor do not turn	Fuse is defective	Replace the fuse	–
	Harness or connector is defective	Repair the harness or connector	–
	Blower relay is defective	Replace the blower relay	55-17
	Blower fan and motor are defective	Replace the blower fan and motor	55-23
	Resistor (for blower motor) is defective	Replace the resistor	55-22
	Blower switch is defective	Replace the blower switch assembly	55-26

Trouble symptom	Problem cause	Remedy	Reference page
Blower fan and motor do not stop turning	Harness or connector is defective	Repair the harness or connector	–
	Blower switch is defective	Replace the blower switch assembly	55-21
	Blower relay is defective	Replace the blower relay	55-17
When the A/C is operating condenser fan or radiator fan does not turn	Fuse is defective	Replace the fuse	–
	Harness or connector is defective	Repair the harness or connector	–
	Condenser fan motor is defective	Replace the condenser fan motor	55-30
	Radiator fan motor is defective	Replace the radiator fan motor	GROUP14 – Radiator
	Engine-ECU is defective	Replace the engine-ECU	–
Inside and outside changeover does not operate	Harness or connector is defective	Repair the harness or connector	–
	Inside and outside changeover switch is defective	Replace the blower switch assembly	55-21
	Inside and outside changeover damper motor is defective	Replace the inside and outside changeover damper motor	55-25

INSPECTION AT THE ENGINE-ECU TERMINAL

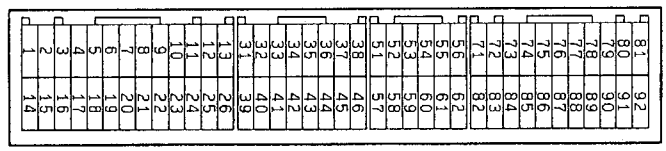

9FU0393

Terminal No.	Check item	Checking requirements	Normal condition
21	Fan controller output	A/C switch: OFF	5 V
		A/C switch: ON	0 V
8*1 22*2	A/C compressor output	A/C compressor relay: OFF	0 V
		A/C compressor relay: ON	System voltage
45	A/C switch input	A/C switch: OFF	0 V
		A/C switch: ON	System voltage
73*1 77*2	Air thermosensor earth	Air thermosensor detection temperature: 25°C	2.0 – 2.9 V
92	Air thermosensor input	Always	0 V

NOTE
*1: Vehicles with immobilizer
*2: Vehicles without immobilizer
*3: Vehicles for Hong Kong
*4: Except vehicles for Hong Kong

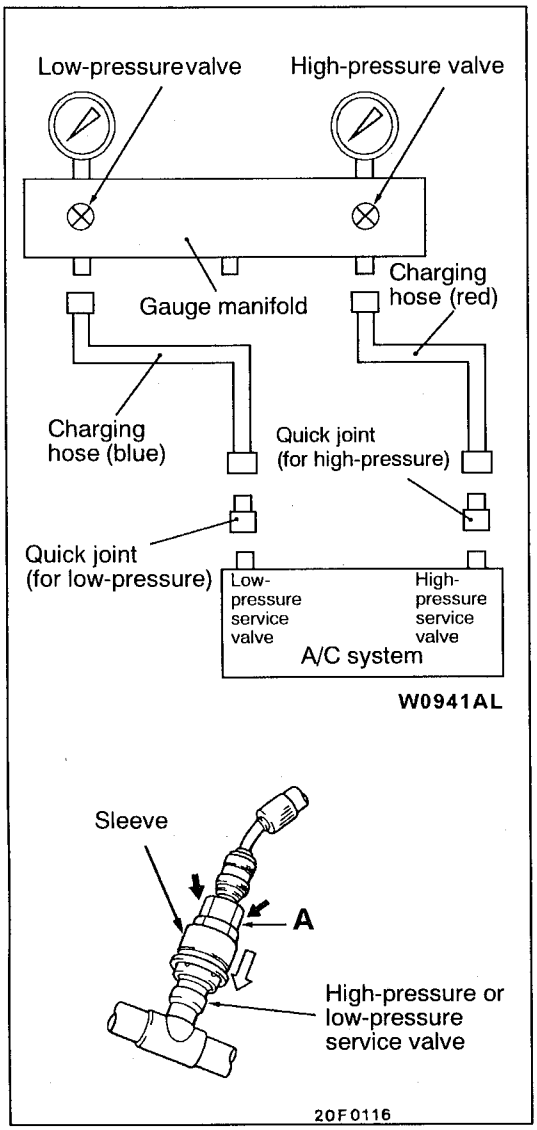

ON-VEHICLE SERVICE

REFRIGERANT LEVEL TEST THROUGH PERFORMANCE TEST

1. Park the vehicle to be tested in a place that is not in direct sunlight.
2. Set conditions for outside air temperature as follows:
   Dry-bulb temperature: 22°C or more
   Relative humidity: 60 to 100%
3. Close all of the doors with the windows fully closed.
4. Close the valves of the gauge manifold.
5. Connect the charging hose (red) to the gauge manifold (high-pressure side) and the quick joint (for high-pressure) to the end of the hose.
6. Connect the charging hose (blue) to the gauge manifold (low-pressure side) and the quick joint (for low-pressure) to the end of the hose.
7. Connect the quick joints to the appropriate service valves of the vehicle.
   Caution
   To connect the quick joint, press section "A" firmly against the service valve until a click is heard. When connecting, run your hand along the hose while pressing the section "A" to ensure that there are no bends in the hose.
8. Start the engine.
9. Turn the blower switch to HI position.
10. Turn on the A/C switch, and set the A/C control to MAX. COOL.
11. Set the air outlet changeover to FACE mode and the inside air/outside air changeover to the inside air recirculation mode.
12. Adjust the engine speed to 1,500 r/min.

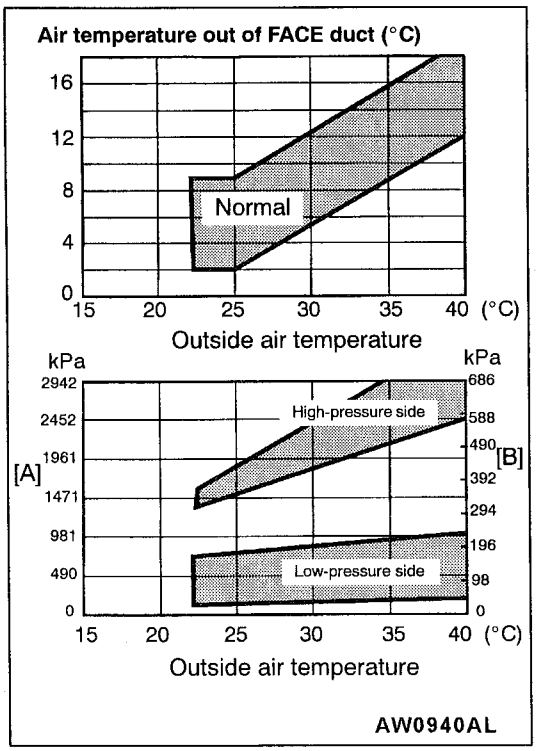

13. Check if the outside air temperature and air temperature blown out of FACE duct, and the outside air temperature and refrigerant pressure (high-pressure and low-pressure sides) are within the normal value range shown in the graphs.
14. If the temperature and pressure are below the given range, replenish the refrigerant. If above, drain the refrigerant. (For charging, refer to P.55-10.)

    NOTE
    In the graph below, see the following:
    [A]: Refrigerant pressure (high-pressure side)
    [B]: Refrigerant pressure (low-pressure side)

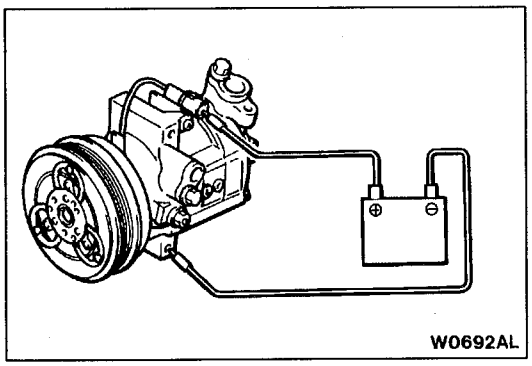

MAGNETIC CLUTCH TEST

1. Disconnect the connector (1-pin) to the magnetic clutch.
2. Connect battery (+) voltage directly to the connector for the magnetic clutch.
3. If the magnetic clutch is normal, there will be "click". If the pulley and armature do not make contact ('click'), there is a malfunction.

RECEIVER DRIER TEST

Operate the unit and check the piping temperature by touching the receiver drier outlet and inlet.
If there is a difference in the temperatures, the receiver drier is restricted.
Replace the receiver drier.

COMPRESSOR DRIVE BELT ADJUSTMENT

Refer to GROUP 11 – On-vehicle Service.

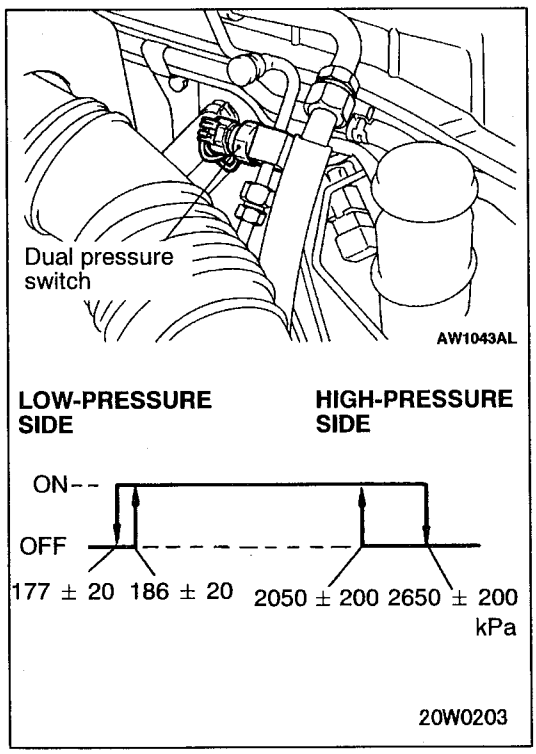

DUAL PRESSURE SWITCH CHECK

1. Remove the dual pressure switch connector and connect the high/low pressure side terminals located on the harness side as shown in the illustration.
2. Install a gauge manifold to the high-pressure side service valve of the refrigerant line. (Refer to Performance Test.)
3. When the high/low pressure sides of the dual pressure switch are at operation pressure (ON) and there is continuity between the respective terminals, then the condition is normal. If there is no continuity, replace the switch.

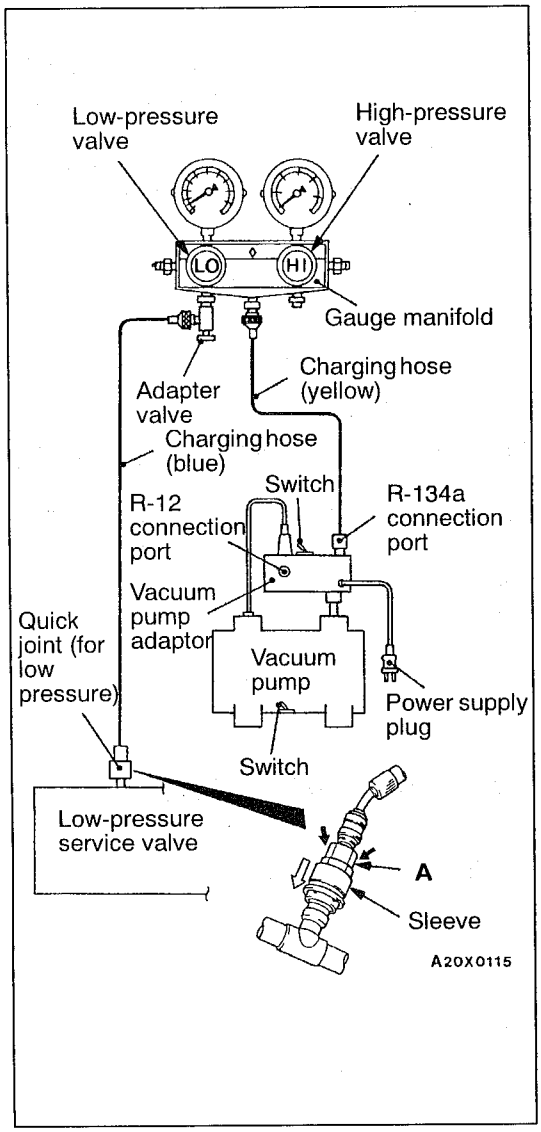

CHARGING

1. With the handles turned back all the way (valve closed), install the adaptor valve to the low-pressure side of the gauge manifold.
2. Connect the charging hose (blue) to the adaptor valve.
3. Connect the quick joint (for low-pressure) to the charging hose (blue).
4. Connect the quick joint (for low-pressure) to the low-pressure service valve.

   NOTE
   The low-pressure service valve should be connected to the suction hose.

   Caution
   (1) Use tools that are suited to R-134a.
   (2) To install the quick joint, press section "A" firmly against the service valve until a click is heard. When connecting, run your hand along the hose while pressing to ensure that there are no bends in the hose.
5. Close the high and low-pressure valves of the gauge manifold.
6. Install the vacuum pump adaptor to the vacuum pump.
7. Connect the vacuum pump plug to the vacuum pump adaptor.
8. Connect the charging hose (yellow) to the R-134a connection port of the vacuum pump adaptor.
9. Tighten the adaptor valve handle (valve open).
10. Open the low-pressure valve of the gauge manifold.
11. Turn the power switch of the vacuum pump to the ON position.

    NOTE
    Even if the vacuum pump power switch is turned ON, the vacuum pump will not operate because of the power supply connection in step (7).

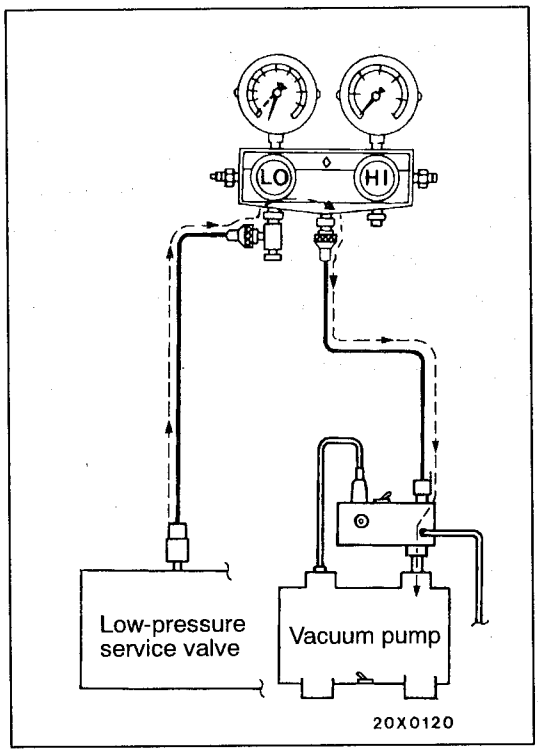

12. Turn the vacuum pump adaptor switch to the R-134a side to start the vacuum pump.

    Caution
    Do not operate the compressor for evacuation.

13. Evacuate to a vacuum reading of 100 kPa or higher (takes approx. 10 minutes).
14. Turn the vacuum pump adaptor switch OFF and allow to stand it for 5 minutes.

    Caution
    Do not operate the compressor in the vacuum condition; damage may occur.

15. Carry out a leak test. (Good if the negative pressure does not drop.)

    Caution
    If the negative pressure drops, increase the tightness of the connections, and then repeat the evacuation procedure from step (12).

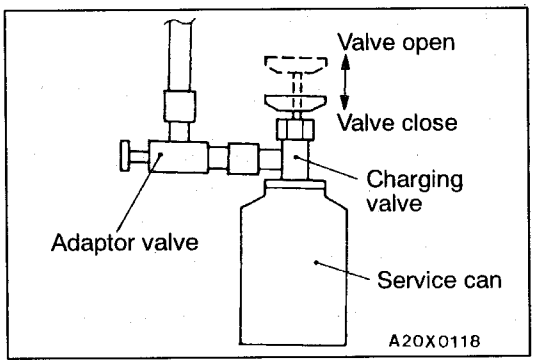

16. With the handle turned back all the way (valve open), install the charging valve to the service can.
17. Turn the handle of the adaptor valve back all the way (valve closed), remove it from the gauge manifold and install the service can.
18. Tighten the handle of the charging valve (valve closed) to puncture the service can.

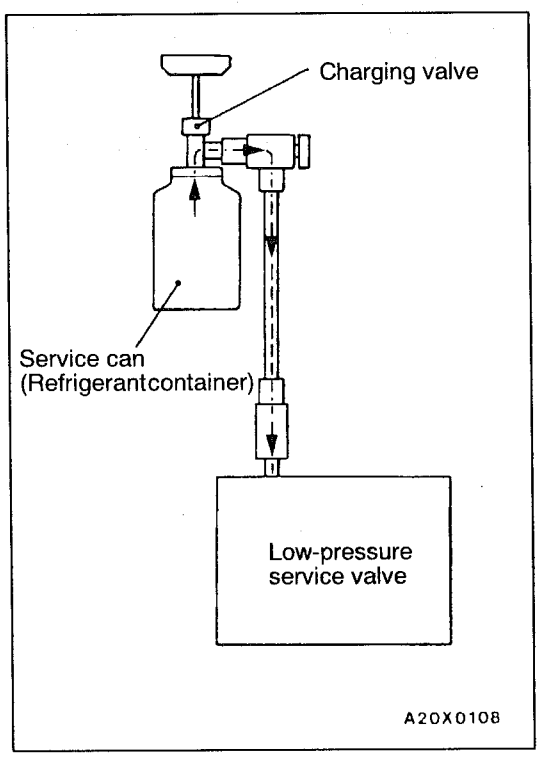

19. Turn the handle of the charging valve back (valve open) and tighten the handle of the adaptor valve (valve open) to charge the system with refrigerant.

    Caution
    If the service can is inverted, liquid refrigerant may be drawn into the compressor damaging it by liquid compression. Keep the service can upright to ensure that refrigerant is charged in gas state.

20. If the refrigerant is not drawn in, turn the handle of the adaptor valve back all the way (valve closed).
21. Check for gas leaks using a leak detector.
    If a gas leak is detected, re-tighten the connections, and then repeat the charging procedure from evacuation in step (12).

    Caution
    The leak detector for R-134a should be used.

22. Start the engine.
23. Operate the A/C and set to the lowest temperature (MAX. COOL).

24. Fix the engine speed at 1,500 r/min.
25. Tighten the handle of the adaptor valve (valve open) to charge the required volume of refrigerant.

    Caution
    If the service can is inverted, liquid refrigerant may be drawn into the compressor damaging it by liquid compression. Keep the service can upright to ensure that refrigerant is charged in gas state.

26. After charging with refrigerant, turn the handle of the adaptor valve back all the way (valve closed).
27. Tighten the charging valve handle (valve closed). Remove the quick joint (for low-pressure) from the low-pressure service valve.

    NOTE
    If the service can is not emptied completely, keep the handles of the charging valve and adaptor valve closed for the next charging.

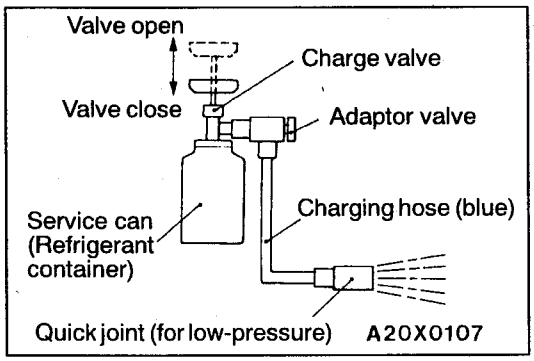

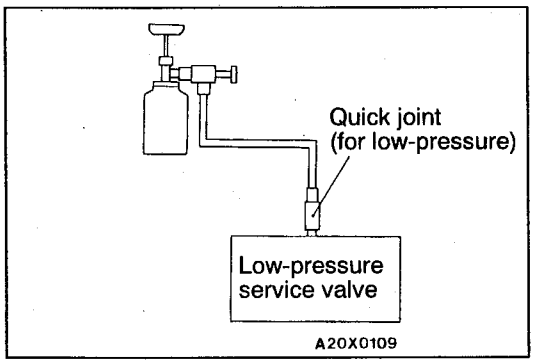

CORRECTING LOW REFRIGERANT LEVEL IN CASE THE SERVICE CAN IS USED.

1. Install the charge valve with the handle turned all the way back (valve open) to the service can.
2. Install the adaptor valve with the handle turned all the way back (valve close) to the charging valve.
3. Connect the charging hose (blue) to the adaptor valve.
4. Connect the charging hose (blue) to the quick joint (for low-pressure).
5. Tighten the handle of the charge valve (valve close), and pierce the service can.
6. Turn the handle of the adaptor valve to bleed the air.
7. Install the quick joint (for low-pressure) to the low-pressure service valve.

   NOTE
   The low-pressure service valve should be connected to the suction hose.

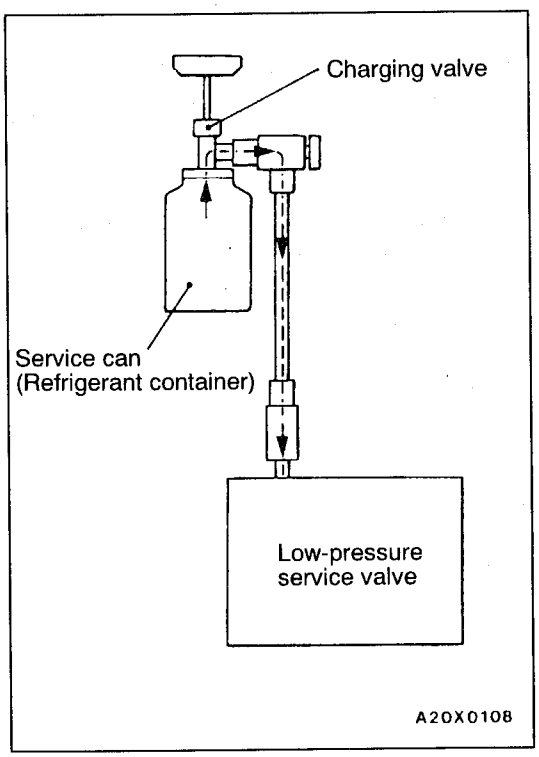

8. Start the engine.
9. Operate the air conditioner and set at the lowest temperature (MAX. COOL).
10. Fix the engine speed at 1,500 r/min.
11. Tighten the handle of the adaptor valve (valve open), and replenish refrigerant while checking the quantity through the sight glass.

Caution
If the service can is inverted, liquid refrigerant may be draw into the compressor damaging it by liquid compression. Keep the service can upright to ensure that refrigerant is changed in gas state.

12. After replenishing is completed, turn the handle of the adaptor valve all the way back (valve close), and remove the quick joint.

NOTE
When there is remainder of refrigerant in the service can, keep it for next use with the charge value and the valve of the adaptor valve being closed.

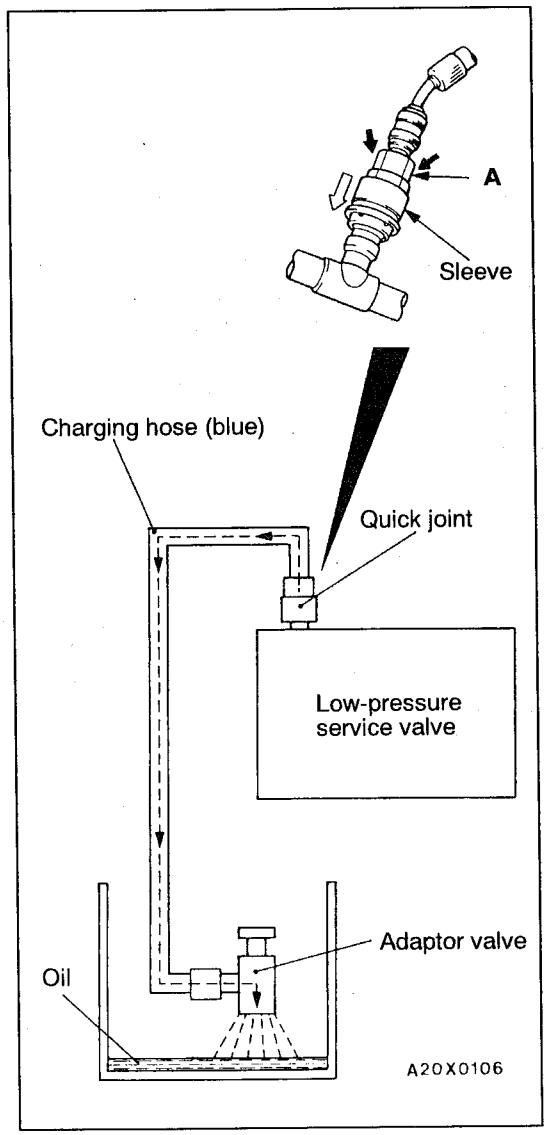

DISCHARGING SYSTEM

1. Run the engine at an engine speed of 1,200–1,500 r/min for approximately 5 minutes with the A/C operating to return to the oil.

NOTE
Returning the oil will be more effective if it is done while driving.

2. Stop the engine.
3. Connect the charging hose (blue) to the adaptor valve with its handle turned back all the way (valve closed).
4. Connect the quick joint to the charging hose (blue).
5. Install the quick joint to the low-pressure service valve.

NOTE
The low-pressure service valve should be connected to the suction hose.

Caution
To connect the quick joint, press section "A" firmly against the service valve until a click is heard. When connecting, run your hand along the hose while pressing to ensure that there are no bends in the hose.

6. Place the adaptor valve inside the container and discharge the refrigerant by opening the handle gradually so that oil does not gush out.

NOTE
Any oil remaining in the container should be returned to the A/C system.

REFILLING OF OIL IN THE A/C SYSTEM

Too little oil will provide inadequate compressor lubrication and cause a compressor failure. Too much oil will increase discharge air temperature.
When a compressor is installed at the factory, it contains 120 mℓ of refrigerant oil. While the A/C system is in operation, the oil is carried through the entire system by the refrigerant. Some of this oil will be trapped and retained in various parts of the system.
When the following system components are changed, it is necessary to add oil to the system to replace the oil being removed with the component.

Compressor oil: DENSO OIL 8

Quantity
Condenser: 10 mℓ
Evaporator: 40 mℓ
Suction hose: 6.5 mℓ

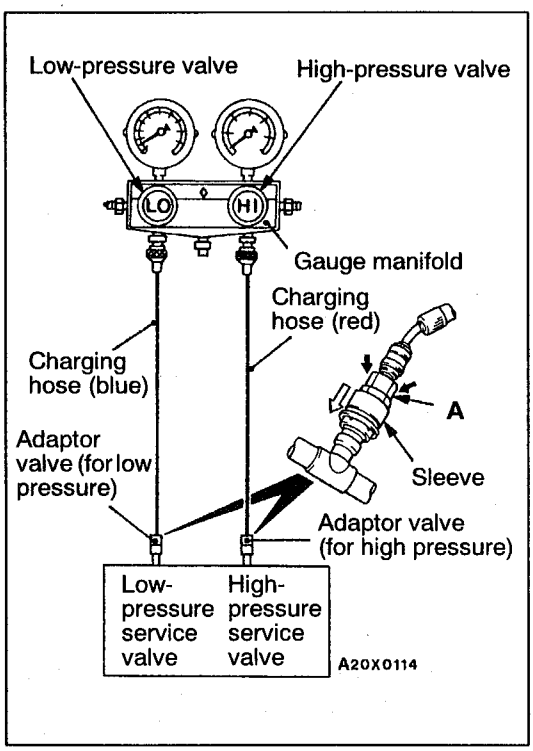

PERFORMANCE TEST

1. The vehicles to be tested should be in a place that is not in direct sunlight.
2. Close the high and low-pressure valve of the gauge manifold.
3. Connect the charging hose (blue) to the low-pressure valve and connect the charging hose (red) to the high-pressure valve of the gauge manifold.
4. Install the quick joint (for low-pressure) to the charging hose (blue), and connect the quick joint (for high-pressure) to the charging hose (red).
5. Connect the quick joint (for low-pressure) to the low-pressure service valve and connect the quick joint (for high-pressure) to the high-pressure service valve.

   NOTE
   The high-pressure service valve is on liquid pipe A and the low-pressure service valve is on the suction hose.

   Caution
   To connect the quick joint, press section "A" firmly against the service valve until a click is heard.
   When connecting, run your hand along the hose while pressing to ensure that there are no bends in the hose.

6. Start the engine.

7. Set the controls to the A/C as follows:
   A/C switch: A/C – ON position
   Mode selection: Face position
   Temperature control: Max. cooling position
   Air selection: Recirculation position
   Blower switch: HI (Fast) position
8. Adjust engine speed to 1,000 r/min with A/C clutch engaged.
9. Engine should be warmed up with doors and windows closed.

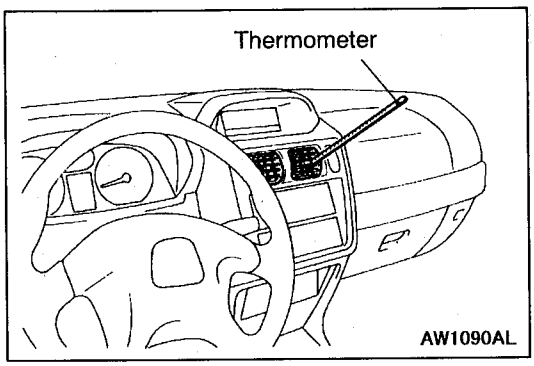

10. Insert a thermometer in the center A/C outlet and operate the engine for 20 minutes.
11. Note the discharge air temperature.

    NOTE
    If the clutch cycles, take the reading before the clutch disengages.

Performance Temperature Chart

Garage ambient temperature °C	20	25	35	40
Discharge air temperature °C	2.5 – 4.5	2.5 – 4.5	4.0 – 6.5	6.5 – 9.0
Compressor high-pressure kPa	765 – 960	765 – 960	1,325 – 1,420	1,570 – 1,765
Compressor low-pressure kPa	40 – 135	40 – 135	80 – 175	155 – 255

REFRIGERANT LEAK REPAIR

LOST CHARGE

If the system has lost all charge due to a leak:

1. Evacuate the system. (See procedure.)
2. Charge the system with approximately one pound of refrigerant.
3. Check for leaks.
4. Discharge the system.
5. Repair leaks.
6. Replace receiver drier.

Caution
Replacement filter-drier units must be sealed while in storage. The drier used in these units will saturate water quickly upon exposure to the atmosphere. When installing a drier, have all tools and supplies ready for quick reassembly to avoid keeping the system open any longer than necessary.

7. Evacuate and charge system.

LOW CHARGE

If the system has not lost all of its refrigerant charge; locate and repair all leaks. If it is necessary to increase the system pressure to find the leak (because of an especially low charge) add refrigerant. If it is possible to repair the leak without discharging the refrigerant system, use the procedure for correcting low refrigerant level.

HANDLING TUBING AND FITTINGS

Kinks in the refrigerant tubing or sharp bends in the refrigerant hose lines will greatly reduce the capacity of the entire system. High pressures are produced in the system when it is operating. Extreme care must be exercised to make sure that all connections are pressure tight. Dirt and moisture can enter the system when it is opened for repair or replacement of lines or components. The following precautions must be observed. The system must be completely discharged before opening any fitting of connection in the refrigeration system. Open fittings with caution even after the system has been discharged. If any pressure is noticed as a fitting is loosened, allow trapped pressure to bleed off very slowly.

Never attempt to rebend formed lines to fit. Use the correct line for the installation you are servicing. A good rule for the flexible hose lines is keep the radius of all bends at least 10 times the diameter of the hose.

Sharper bends will reduce the flow of refrigerant. The flexible hose lines should be routed so that they are at least 80 mm from the exhaust manifold. It is good practice to inspect all flexible hose lines at least once a year to make sure they are in good condition and properly routed.

Unified plumbing connections with O-rings, these O-rings are not reusable.

COMPRESSOR NOISE

You must first know the conditions when the noise occurs. These conditions are: weather, vehicle speed, in gear or neutral, engine temperature or any other special conditions.

Noises that develop during A/C operation can often be misleading. For example: what sounds like a failed front bearing or connecting rod, may be caused by loose bolts, nuts, mounting brackets, or a loose clutch assembly. Verify accessory drive belt tension (power steering or alternator).

Improper accessory drive belt tension can cause a misleading noise when the compressor is engaged and little or no noise when the compressor is disengaged.

Drive belts are speed-sensitive. That is, at different engine speeds, and depending upon belt tension, belts can develop unusual noises that are often mistaken for mechanical problems within the compressor.

ADJUSTMENT

1. Select a quiet area for testing. Duplicate conditions as much as possible. Switch compressor on and off several times to clearly identify compressor noise. To duplicate high ambient conditions (high head pressure), restrict air flow through condenser. Install manifold gauge set to make sure discharge pressure doesn't exceed 2,070 kPa.
2. Tighten all compressor mounting bolts, clutch mounting bolt, and compressor drive belt. Check to assure clutch coil is tight (no rotation or wobble).
3. Check refrigerant hoses for rubbing or interference that can cause unusual noises.
4. Check refrigerant charge. (See "Charging System".)
5. Recheck compressor noise as in Step 1.
6. If noise still exists, loosen compressor mounting bolts and retorque. Repeat Step 1.
7. If noise continues, replace compressor and repeat Step 1.

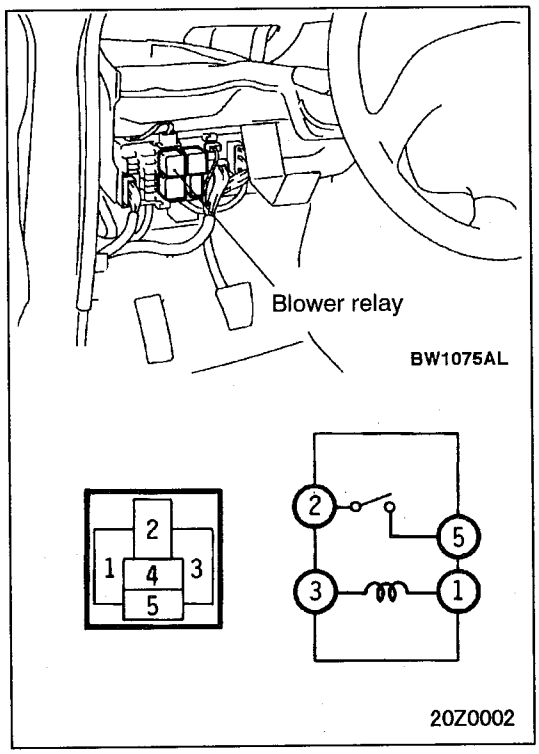

POWER RELAY CHECK

BLOWER RELAY

Battery voltage	Terminal No.			
	1	3	2	5
Power is not supplied	○	○		
Power is supplied	⊕	⊖	○	○

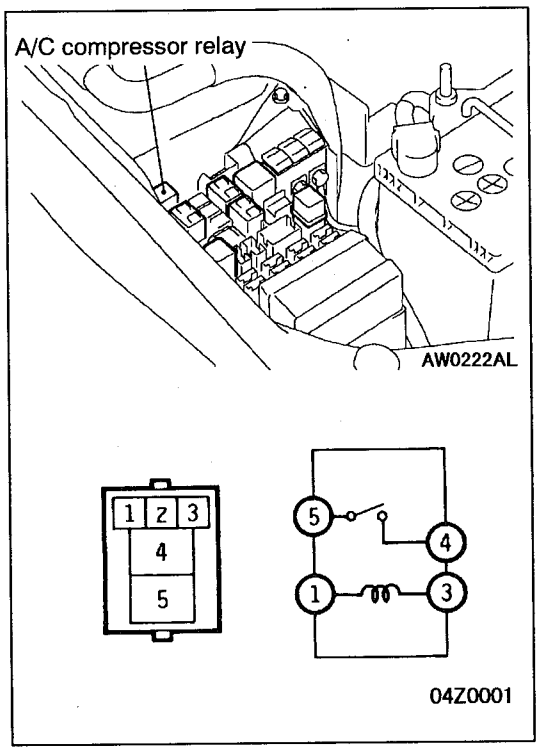

A/C COMPRESSOR RELAY

Battery voltage	Terminal No.			
	1	3	4	5
Power is not supplied	○	○		
Power is supplied	⊕	⊖	○	○

FAN CONTROL RELAY

Refer to GROUP 14 – Radiator.

IDLE-UP OPERATION CHECK

1. Before inspection and adjustment, set vehicle in the following condition:
   - Engine coolant temperature: 80 – 90°C
   - Lights, electric cooling fan and accessories: Set to OFF
   - Transmission: Neutral (N or P for vehicles with A/T)
   - Steering wheel: Straightforward
2. Check whether or not the idling speed is the standard value.

   Standard value:

Engine model	r/min
4G1	750 ± 100
4G9-MPI	700 ± 100
4G9-GDI	600 ± 50

3. When the A/C is running after turning the A/C switch to ON, and the blower switch to the MH or HI position, check to be sure that the idle speed is at the standard value.

   Standard value:

Engine model	r/min
4G1	850 ± 100
4G9-MPI	850 ± 100
4G9-GDI	A/C at low load 700 ± 50 A/C at high load 800 ± 50

NOTE
There is no necessity to make an adjustment, because the idling speed is automatically adjusted by the ISC system. If, however, there occurs a deviation from the standard value for some reason, check the ISC system. (Refer to GROUP 13A, 13B or 13C – On-vehicle Service.)

HEATER CONTROL ASSEMBLY AND A/C SWITCH

REMOVAL AND INSTALLATION

Pre-removal and Post-installation Operation
- Center Air Outlet Assembly, Instrument Under Cover Removal and Installation (Refer to GROUP 52A – Instrument Panel.)
- Radio, Tape Player Removal and Installation (Refer to GROUP 54.)

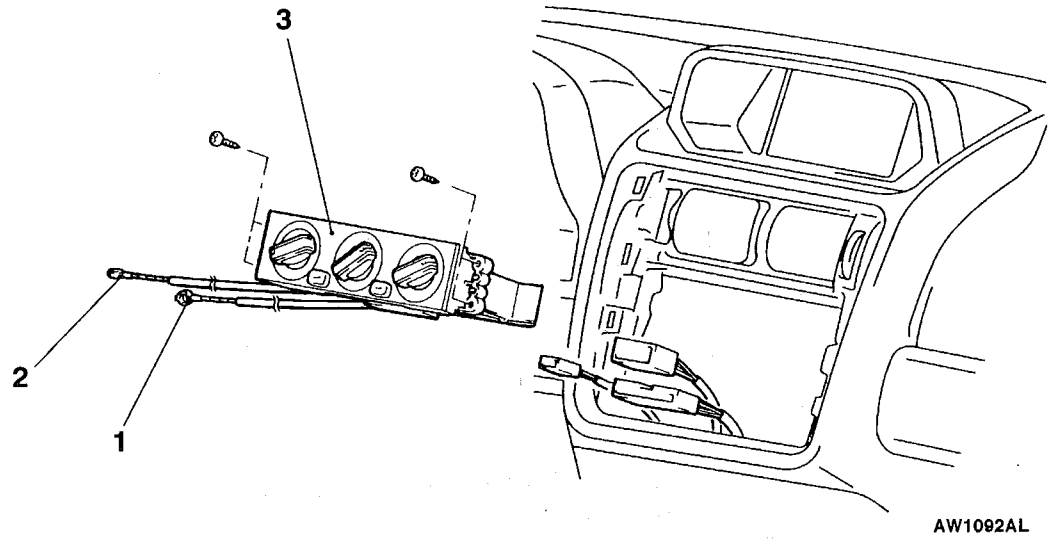

Removal steps

▶B◀ 1. Air mix damper cable connection
▶A◀ 2. Air outlet changeover damper cable connection
3. Heater control assembly

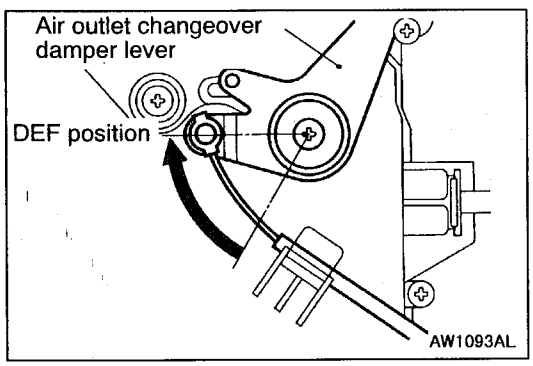

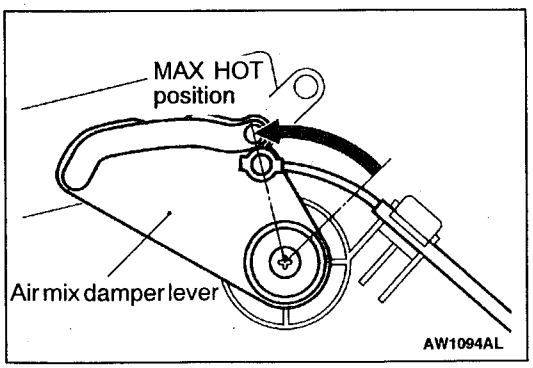

INSTALLATION SERVICE POINTS

▶A◀ AIR OUTLET CHANGEOVER DAMPER CABLE CONNECTION

1. Set the air outlet changeover control knob on the heater control assembly to the DEF position.
2. Set the air outlet changeover damper lever of the heater unit to the DEF position (turn clockwise the damper lever unit it stops), and then connect the cable to the lever.

▶B◀ AIR MIX DAMPER CABLE CONNECTION

1. Set the temperature control knob on the heater control assembly to the MAX HOT position.
2. Set the air mix damper lever of the heater unit to the MAX HOT position (turn clockwise the damper lever until it stops), and then connect the cable to the lever.

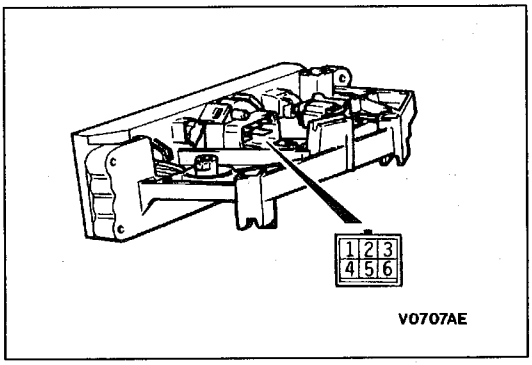

INSPECTION

BLOWER SWITCH CONTINUITY CHECK

Switch position	Terminal No.					
	1	2	3	4	5	6
OFF						
• (LO)			○		○	
• (ML)	○		○			
• (MH)			○			○
• (HI)			○	○		

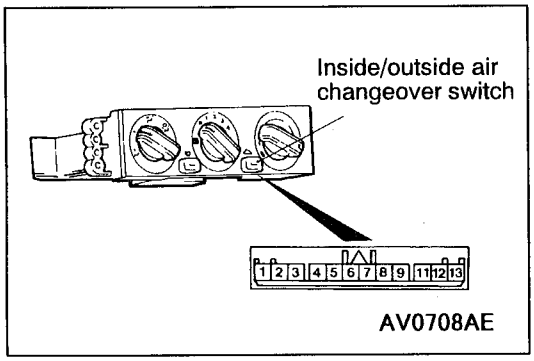

INSIDE/OUTSIDE AIR CHANGEOVER SWITCH CONTINUITY CHECK

Switch position	Terminal No.						
	1	2	3	IND	4	8	9
RECIRC		○	○	○	○		
FRESH	○		○			ILL	

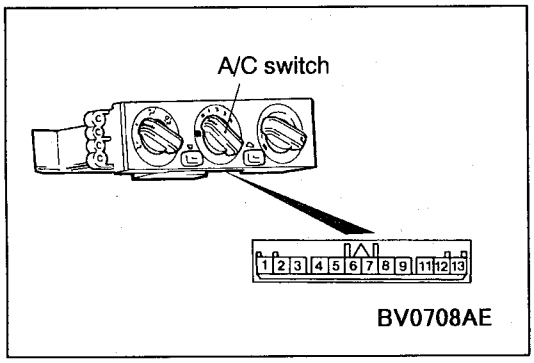

A/C SWITCH CONTINUITY CHECK

Switch position	Terminal No.					
	5	IND	6	7	8	9
OFF						
ON	○	○	○	○	ILL	

DISASSEMBLY AND REASSEMBLY

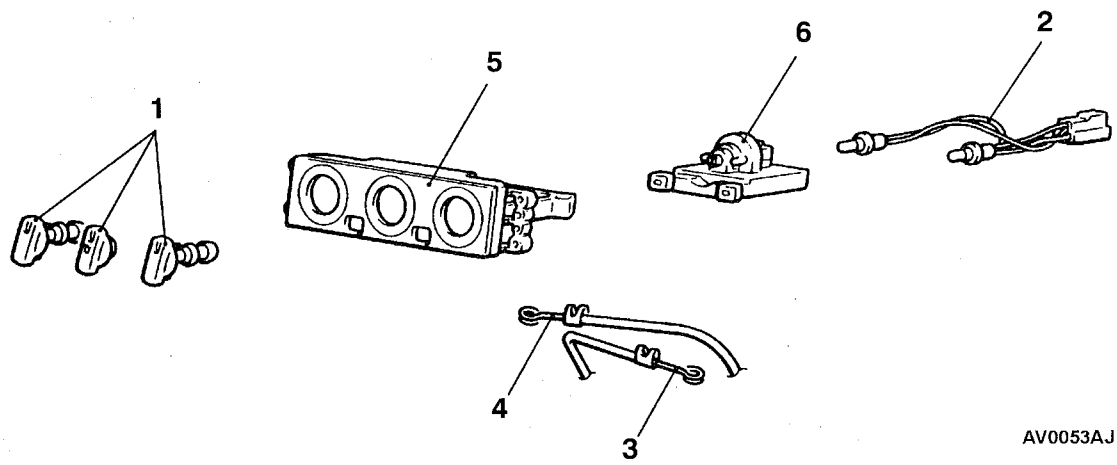

Disassembly steps

1. Knob assembly
2. Bulb harness
3. Air outlet changeover damper cable
4. Air mix damper cable
5. Heater control panel
6. Blower switch assembly

◀A▶ 3
◀A▶ 4

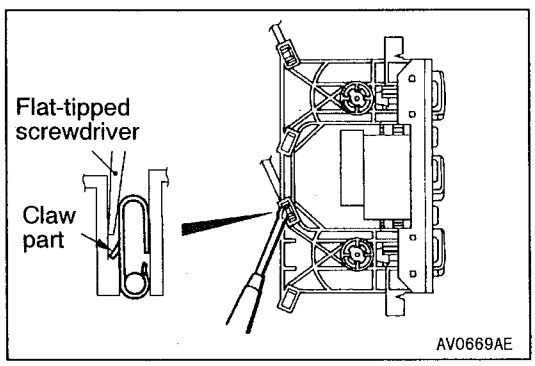

DISASSEMBLY SERVICE POINT

◀A▶ AIR OUTLET CHANGEOVER DAMPER CABLE/AIR MIX DAMPER CABLE REMOVAL

Insert a flat-tipped screwdriver into the control base clip from inner side, and then remove the cable by lifting the claw part of the clip.

HEATER UNIT, BLOWER UNIT, RESISTER AND EVAPORATOR

REMOVAL AND INSTALLATION

Caution: SRS
When removing and installing the floor console assembly from vehicles equipped with SRS, do not let it bump against the SRS-ECU or the components.

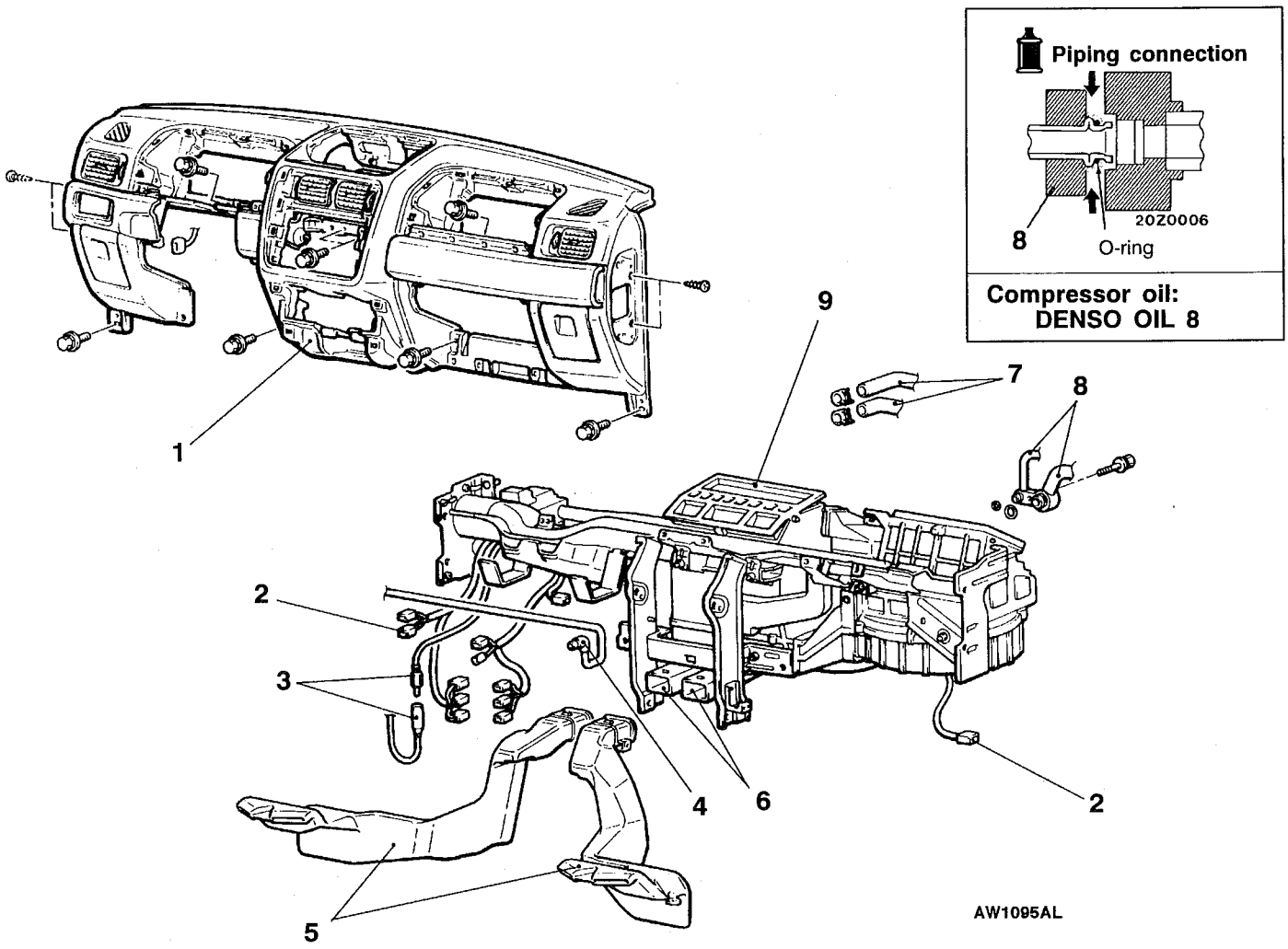

Heater unit and blower unit removal steps

- Discharging and Charging of Refrigerant (Refer to P.55-10.)
- Discharging and Charging of Engine Coolant (Refer to GROUP 14 – On-vehicle Service.)
- Engine Cover Removal and Installation (Refer to GROUP 11 – Engine Assembly.)
- Air Cleaner Assembly Removal and Installation.
- Front Scuff Plate, Rear Scuff Plate, Cowl Side Trim and Glove Box Removal and Installation (Refer to GROUP 52A – Trims.)
- Front Seat Assembly (Driver's side) Removal and Installation (Refer to GROUP 52A – Seat.)
- Shift Lever Assembly Removal and Installation (Refer to GROUP 22 – Transmission Control.) <M/T>
- Selector Lever Assembly Removal and Installation (Refer to GROUP 23 – Transmission Control.) <A/T>
- SRS–ECU (Refer to GROUP 52B.)
- Floor Carpet Removal and Installation.

1. Instrument panel assembly (Refer to GROUP 52A.)
2. Intermediate connector connections
3. Antenna feeder cable connection
4. DIN cable
5. Rear heater duct B
6. Rear heater duct A
7. Heater hoses connection
8. Refrigerant line connection
9. Blower unit, heater unit and deck crossmember assembly

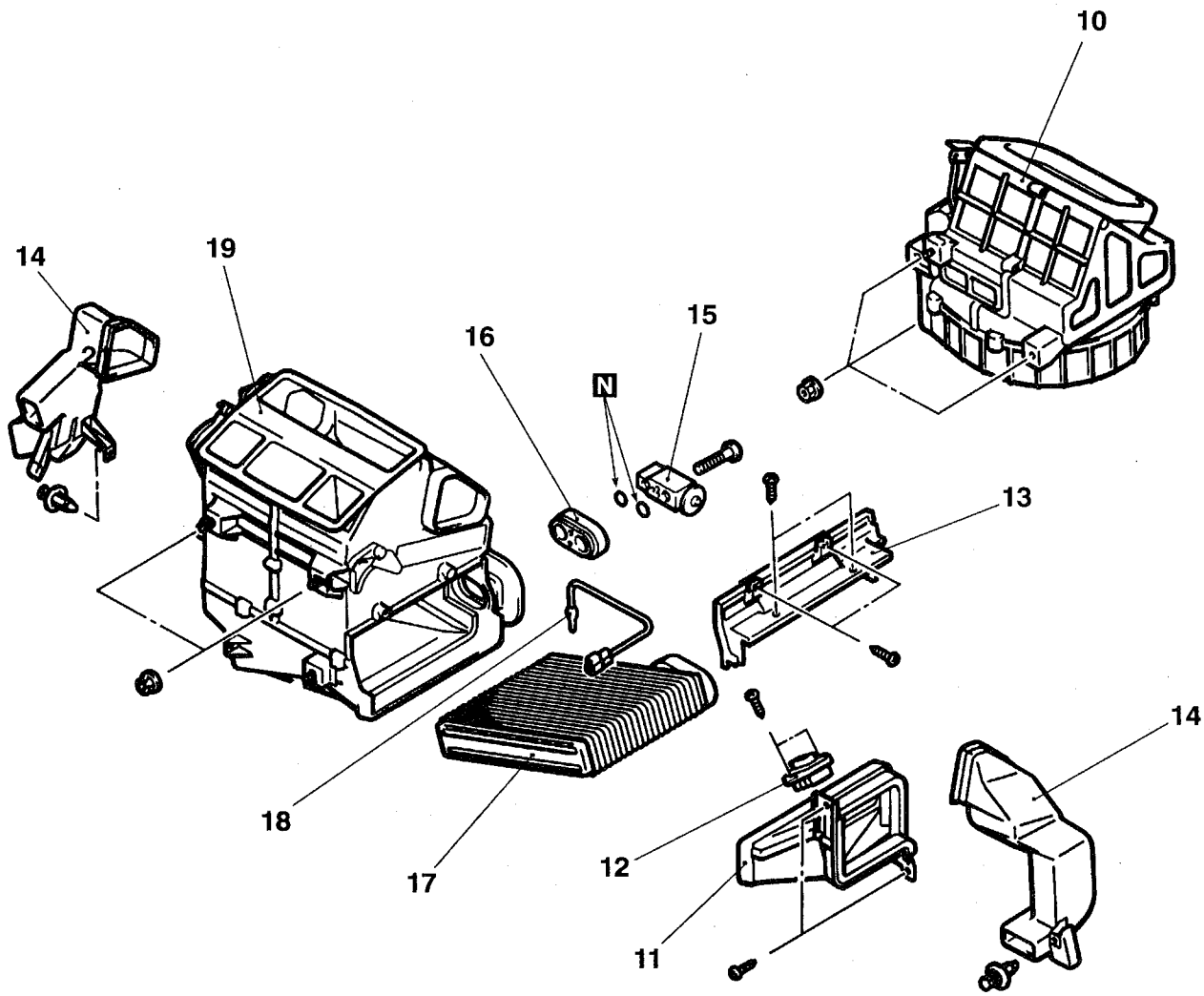

10. Blower unit
14. Foot duct
19. Heater unit assembly

Evaporator and Resister removal steps

- Discharging and Charging of Refrigerant (Refer to P.55-10.)
- Engine Cover (Refer to GROUP 11 – Engine Assembly.)
- Air Cleaner
- Glove Box (Refer to GROUP 52A – Instrument Panel.)

11. Joint duct
12. Resistor
13. Cover
14. Foot duct
8. Refrigerant line connection
15. Expansion valve
16. Joint
17. Evaporator
18. Air thermosensor

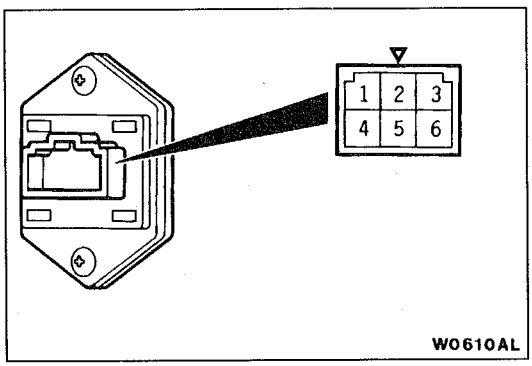

INSPECTION

RESISTOR CHECK

Use a circuit tester to measure the resistance between the terminals as indicated below. Check that the measured value is at the standard value.

Standard value:

Measurement terminal	Standard value Ω
Between terminals 1 and 3 (LO)	2.3
Between terminals 1 and 6 (ML)	1.0
Between terminals 1 and 4 (MH)	0.3

DISASSEMBLY AND REASSEMBLY

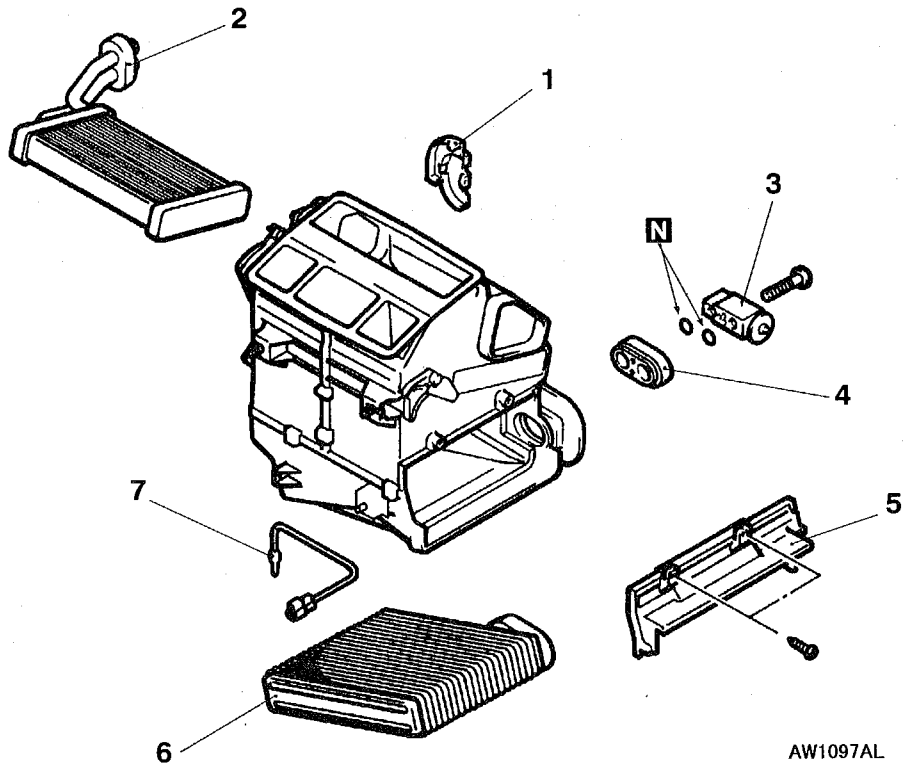

Disassembly steps

1. Cover
2. Heater core
3. Expansion valve
4. Joint
5. Cover
6. Evaporator
7. Air thermosensor

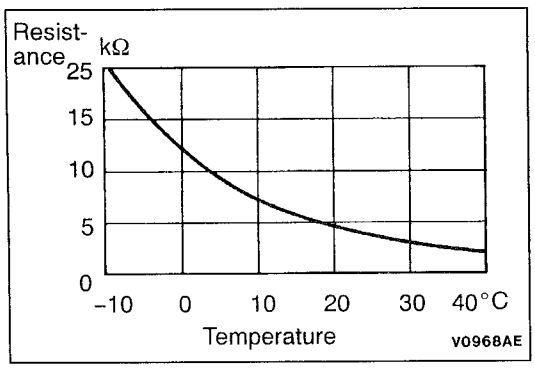

INSPECTION

AIR THERMOSENSOR CHECK

Measure the resistance between terminals under two or more temperature conditions. The resistance should be close to the values shown in the graph.

BLOWER MOTOR ASSEMBLY AND INSIDE/OUTSIDE AIR CHANGEOVER DAMPER MOTOR

REMOVAL AND INSTALLATION

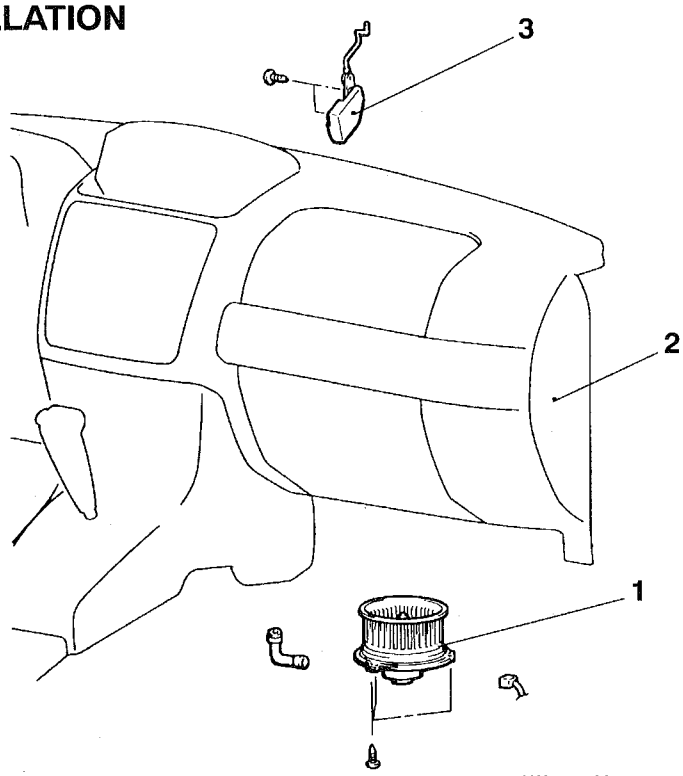

AW1098AL

1. Blower motor assembly

Inside/outside air changeover damper motor removal steps

2. Instrument panel (Refer to GROUP 52A)
3. Inside/outside air changeover damper motor

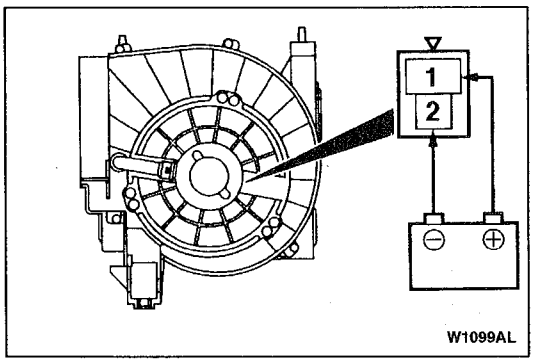

W1099AL

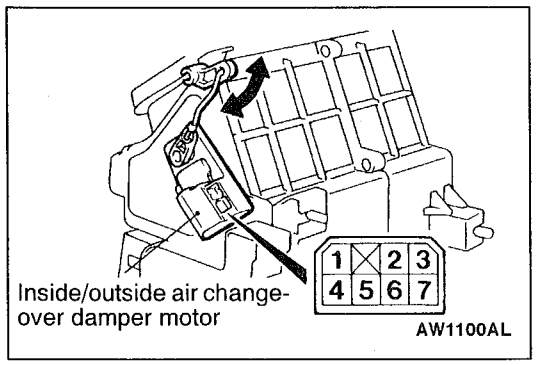

Inside/outside air changeover damper motor

AW1100AL

INSPECTION

BLOWER MOTOR CHECK

When battery voltage is applied between the terminals, check that the motor operates. Also, check that there is no abnormal noise.

INSIDE/OUTSIDE CHANGEOVER DAMPER MOTOR CHECK

Battery connection terminal			Lever operation
4	6	7	
⊖		⊕	Moves to the inside air position
	⊖	⊕	Moves to the outside air position

Caution
Cut off the battery voltage when the damper is in the inside air position or outside air position.

COMPRESSOR AND TENSION PULLEY

REMOVAL AND INSTALLATION

Pre-removal Operation
Discharging of Refrigerant (Refer to P.55-13.)

Post-installation Operation
- Charging of Refrigerant (Refer to P.55-10.)
- Drive Belt Tension Adjustment (Refer to GROUP 11 – On-vehicle Service.)

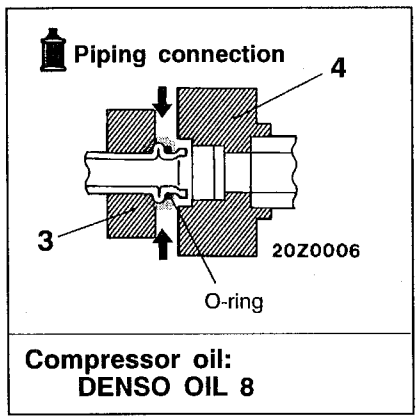

Compressor oil:
DENSO OIL 8

<4G9>

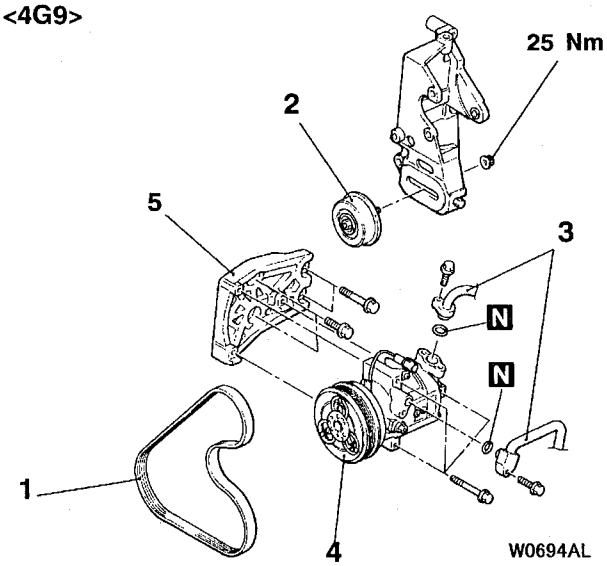

<4G1>

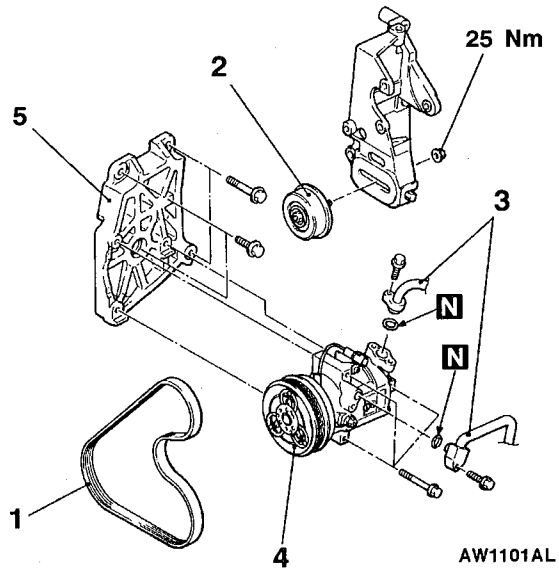

Removal steps
- Washer tank (Refer to GROUP 51.)

1. Drive belt (Refer to GROUP 11.)
2. Tension pulley

◀A▶ 3. Suction hose and discharge hose connection
- Under cover

◀B▶ ▶A◀ 4. Compressor
5. Compressor bracket

REMOVAL SERVICE POINTS

◀A▶ SUCTION HOSE, DISCHARGE HOSE DISCONNECTION

Plug the nipples of the disconnected hose and compressor to prevent from foreign materials from entering.

Caution
Plug the nipples with material that is not permeable to air as compressor oil and receiver absorb water vapour easily.

◀B▶ COMPRESSOR REMOVAL

When doing this work, be careful not to spill the compressor oil.

INSTALLATION SERVICE POINT

▶A◀ COMPRESSOR INSTALLATION

If a new compressor is installed, first adjust the amount of oil according to the procedures described below, and then install the compressor.

1. Measure the amount (X mℓ) of oil within the removed compressor.
2. Drain (from the new compressor) the amount of oil calculated according to the following formula, and then install the new compressor.
   New compressor oil amount

   80 mℓ – X mℓ = Y mℓ

   NOTE
   (1) Y mℓ indicates the amount of oil in the refrigerant line, the condenser, the evaporator etc.
   (2) When replacing the following parts at the same time as the compressor, subtract the rated oil amount of the each part from Y mℓ and discharge from the new compressor.

   Quantity
   Evaporator: 40 mℓ
   Condenser: 10 mℓ
   Suction hose: 6.5 mℓ

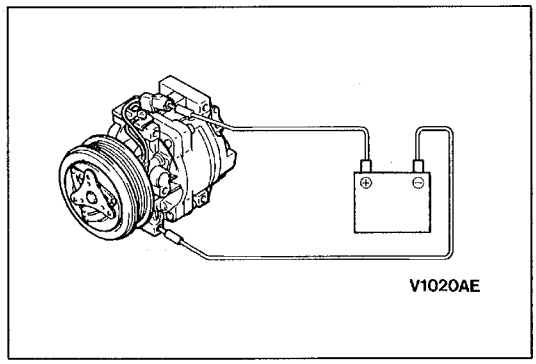

INSPECTION

COMPRESSOR MAGNETIC CLUTCH OPERATION INSPECTION

Connect the battery (+) terminal to the compressor side terminal, and earth the battery (–) terminal to the body of the compressor. The condition is normal if the sound of the magnetic clutch (click) can be heard.

MAGNETIC CLUTCH

DISASSEMBLY AND REASSEMBLY

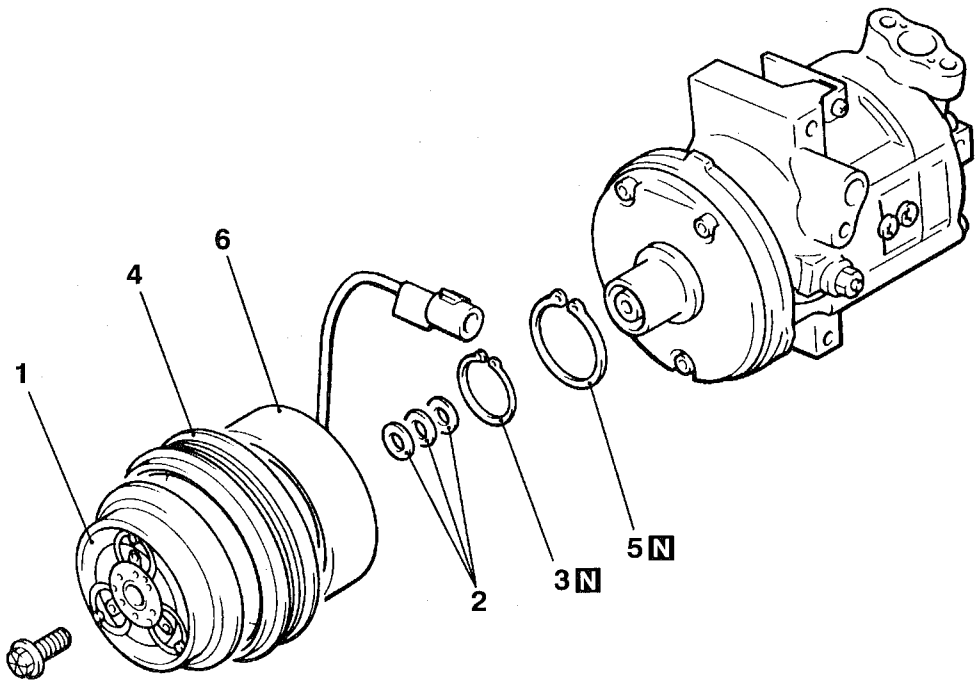

Magnetic clutch disassembly steps

◀A▶ ▶B◀ • Air gap adjustment
1. Armature plate
2. Shims

▶A◀ 3. Snap ring
4. Rotor
5. Snap ring
6. Clutch coil

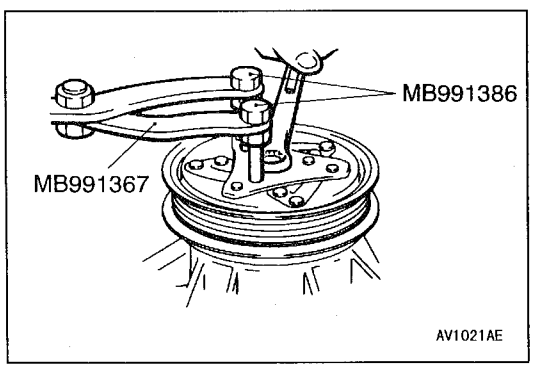

DISASSEMBLY SERVICE POINT

◀A▶ ARMATURE PLATE REMOVAL

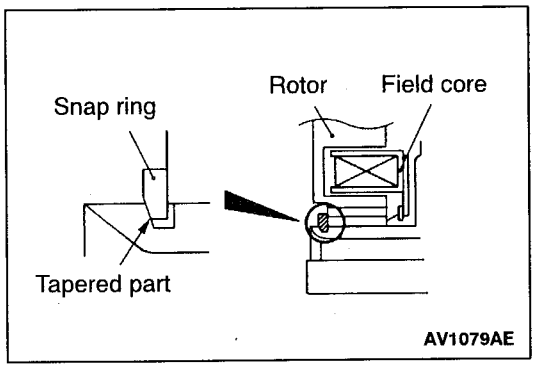

REASSEMBLY SERVICE POINTS

▶A◀ SNAP RING INSTALLATION

Install the snap ring so that the tapered surface is at the outer side.

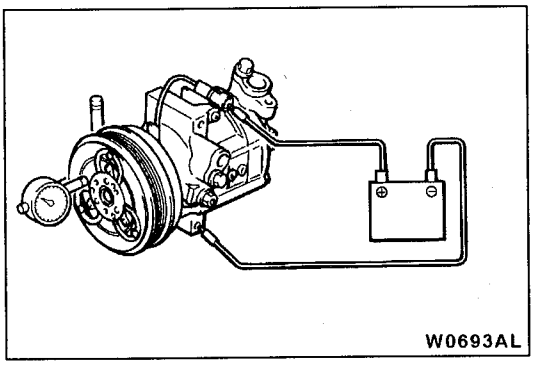

▶B◀ AIR GAP ADJUSTMENT

Check whether or not the air gap of the clutch is within the standard value.

Standard value: 0.25 – 0.55 mm

NOTE
If there is a deviation of the air gap from the standard value, make the necessary adjustment by adjusting the number of shims.

CONDENSER AND CONDENSER FAN MOTOR

REMOVAL AND INSTALLATION

Pre-removal and Post-installation Operation
- Under Cover Removal and Installation

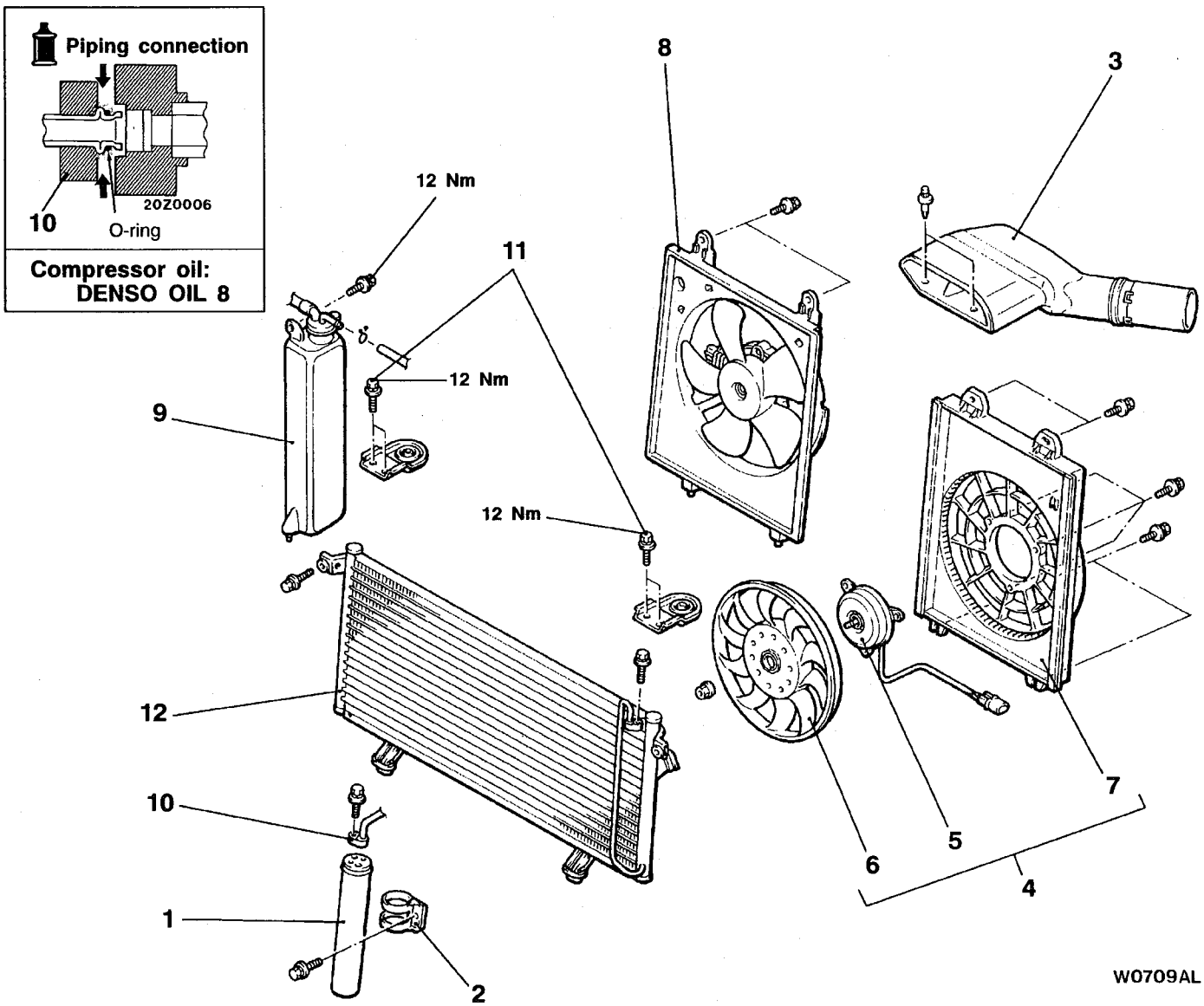

Condenser assembly removal steps
- Discharging and charging of refrigerant (Refer to P.55-10.)
- Radiator grille (Refer to GROUP 51.)

▶A◀ 1. Receiver
2. Receiver bracket
3. Air intake duct
4. Fan motor and shroud assembly
8. Radiator fan motor and shroud assembly (Refer to GROUP 14)
9. Condense tank
◀A▶ 10. Discharge hose connection

◀B▶ 11. Radiator mounting bolt
- Engine cover (Refer to GROUP 11A.)

12. Condenser assembly

Condenser fan and motor assembly removal steps
4. Condenser fan motor and shroud assembly
5. Condenser motor and fan controller assembly
6. Condenser fan
7. Condenser fan shroud

REMOVAL SERVICE POINTS

◀A▶ DISCHARGE HOSE DISCONNECTION

Plug the nipples of the disconnected pipe, hose and condenser assembly to prevent foreign materials from entering.

Caution
Plug the nipples with material that is not permeable to air as compressor oil and the receiver absorb water vapour easily.

◀B▶ CONDENSER ASSEMBLY REMOVAL

1. Remove the mounting bolts from the front side of the headlamp support member.
2. Disengage the lower part of the radiator, and then move the radiator slightly toward the engine.
3. Raise the condenser assembly to remove from the engine compartment.

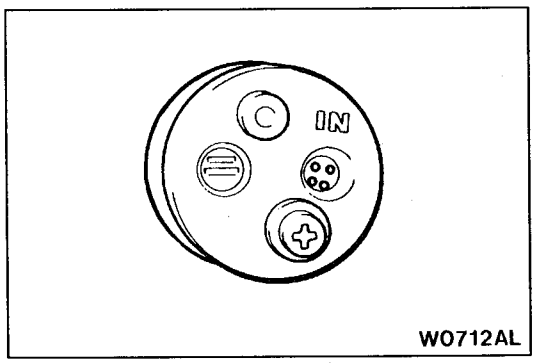

W0712AL

INSTALLATION SERVICE POINT

▶A◀ RECEIVER INSTALLATION

Install the pipe coming from the condenser to the side stamped "IN".

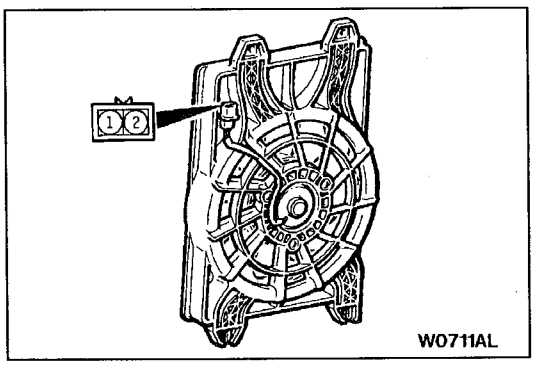

W0711AL

INSPECTION

CONDENSER FAN CHECK

Terminals connected to battery		Condenser fan condition
1	2	
⊕	⊖	Operates

REFRIGERANT LINE

REMOVAL AND INSTALLATION

<L.H. DRIVE VEHICLES>

Pre-removal and Post-installation Operation
- Discharging and Charging of Refrigerant (Refer to P.55-10.)
- Engine Cover Removal and Installation (Refer to GROUP 11 – Engine Assembly.)
- Air Cleaner Assembly Removal and Installation.

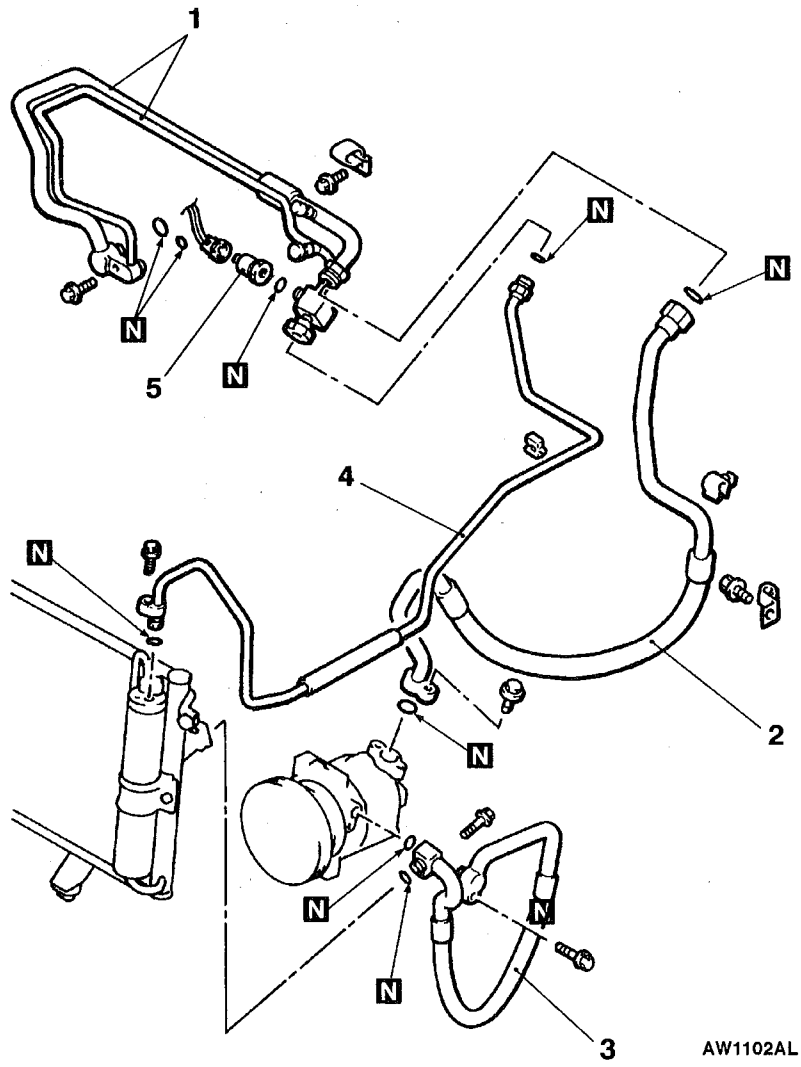

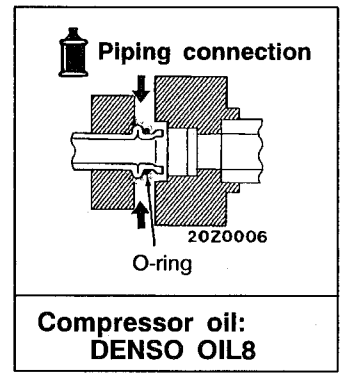

Compressor oil:
DENSO OIL8

<R.H. DRIVE VEHICLES>

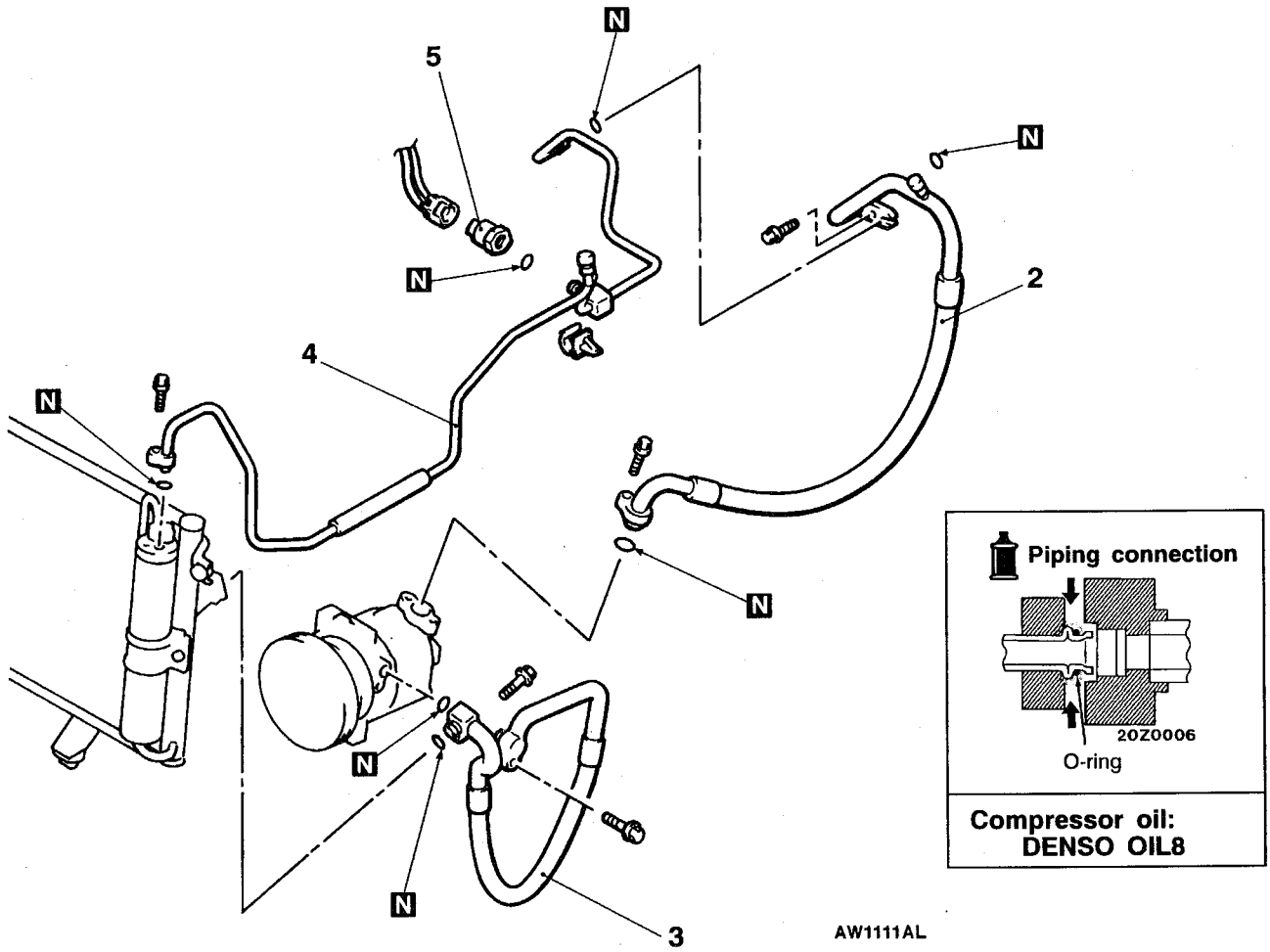

Removal steps

◀A▶ 1. Pipe assembly
◀A▶ 2. Suction hose
◀A▶ 3. Discharge hose
◀A▶ 4. Liquid pipe
◀A▶ 5. Dual pressure switch

REMOVAL SERVICE POINT

◀A▶ HOSE/PIPE DISCONNECTION

Plug the nipples of the disconnected hose, receiver, evaporator and compressor to prevent foreign materials from entering.

Caution
Plug the nipples with material that is not permeable to air as compressor oil and the receiver absorb water vapour easily.

VENTILATORS

Caution: SRS
When removing and installing the floor console assembly from vehicles equipped with SRS, do not let it bump against the SRS-ECU or the components.

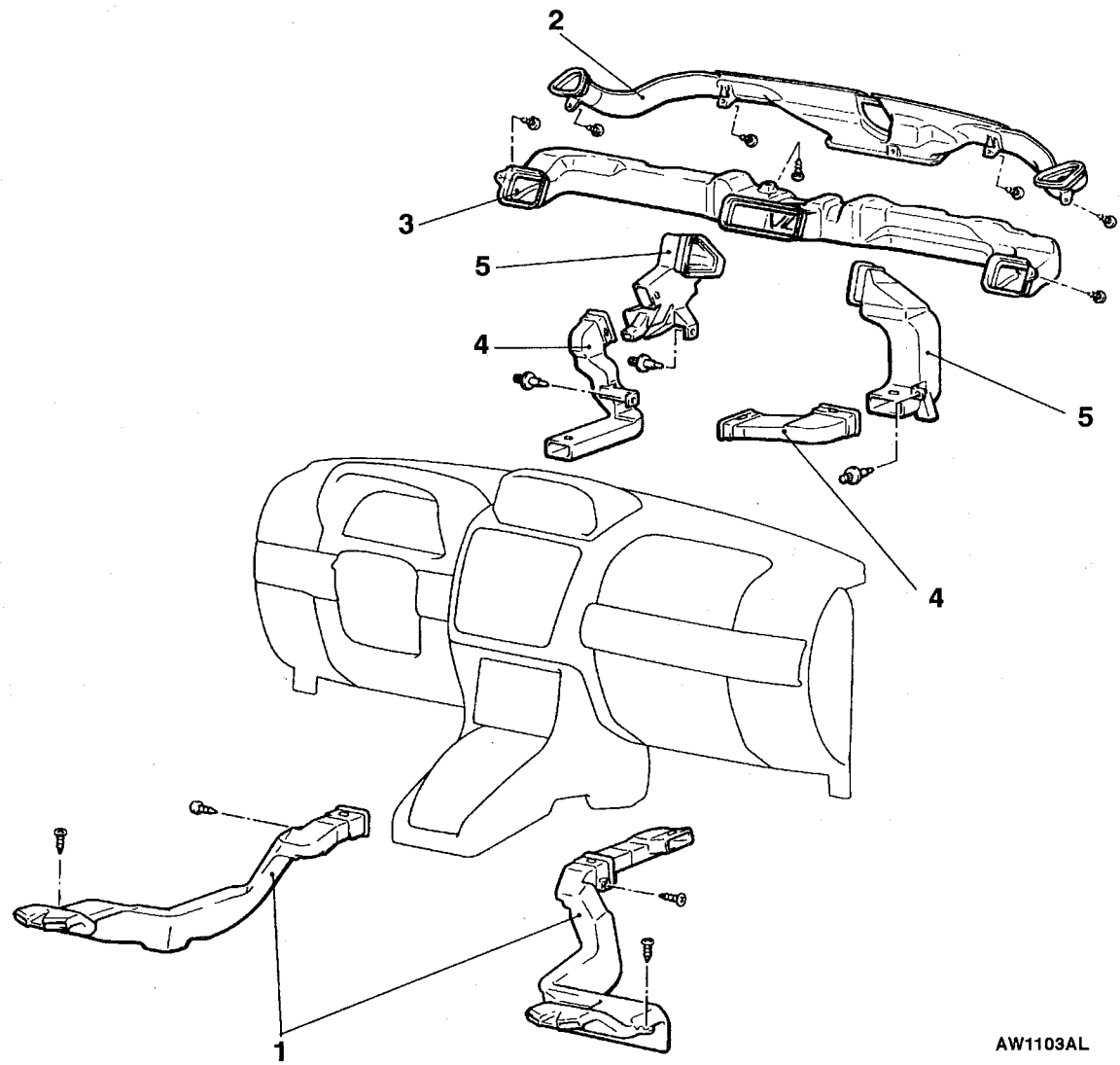

Rear heater duct B removal steps
- Front scuff plate, cowl side trim and center console assembly (Refer to GROUP 52A – Instrument Panel.)
- Floor console assembly (Refer to GROUP 52A.)
- Front seat (Refer to GROUP 52A.)
- Floor carpet

1. Rear heater duct B

Defroster nozzle and distribution duct removal steps
- Instrument panel (Refer to GROUP 52A.)

2. Defroster nozzle assembly
3. Distribution duct assembly

Foot distribution duct and rear heater duct A removal steps
- Floor console assembly (Refer to GROUP 52A.)
- Instrument panel assembly (Refer to GROUP 52A.)
- Blower motor (Refer to P.55-25.)

4. Rear heater duct A
5. Foot distribution duct

NOTE
For the center air outlet assembly and the side air outlet assembly, refer to GROUP 52A – Instrument panel.

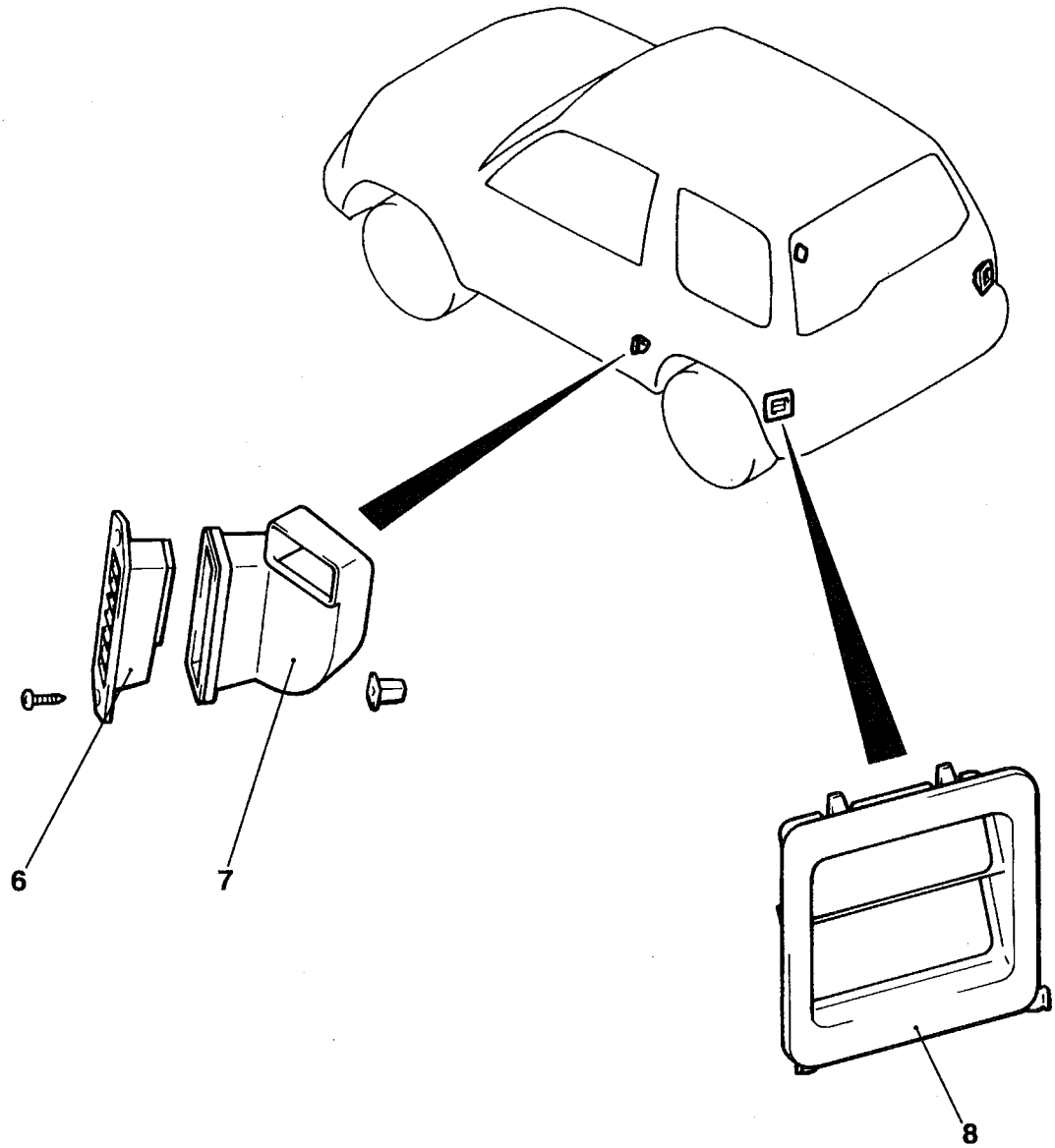

AW0708AL

6. Defroster nozzle assembly
7. Distribution duct assembly

Rear vent duct removal steps

- Rear bumper (Refer to GROUP 51.)

8. Rear vent duct

NOTE
For the front deck garnish, refer to GROUP 51 – Windshield Wiper and Washer.

NOTES